Welcome to Teensy® 4.0

32 Bit Arduino-Compatible Microcontroller

To begin using Teensy, please visit the website & click Getting Started.

www.pjrc.com/teensy

Digital Pins
digitalRead
digitalWrite
pinMode

Analog Pins
analogRead

PWM Pins
analogWrite

Digital Audio
Audio Library

Serial Ports
Serial1 - Serial7

I²C Port
Wire Library

SPI Port
SPI Library

CAN Bus
FlexCAN_t4 Library

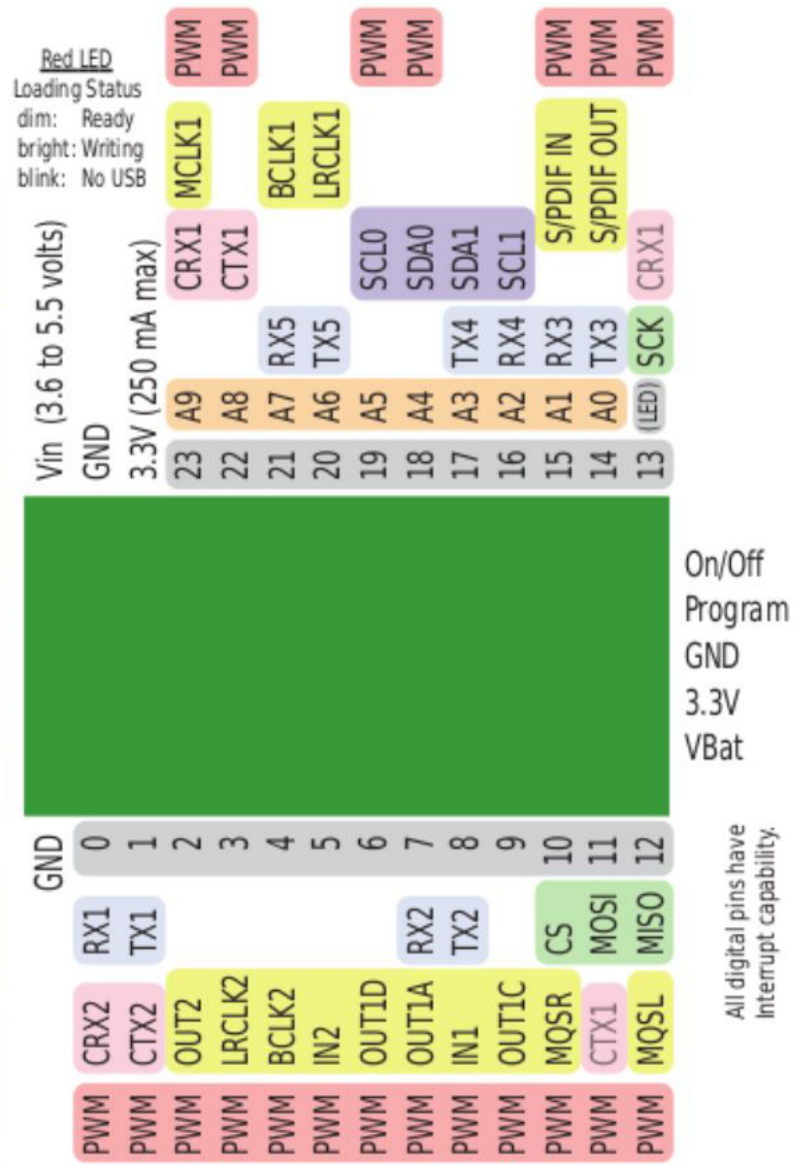

Teensy® 4.0 Back Side

Additional pins and features available on the back side

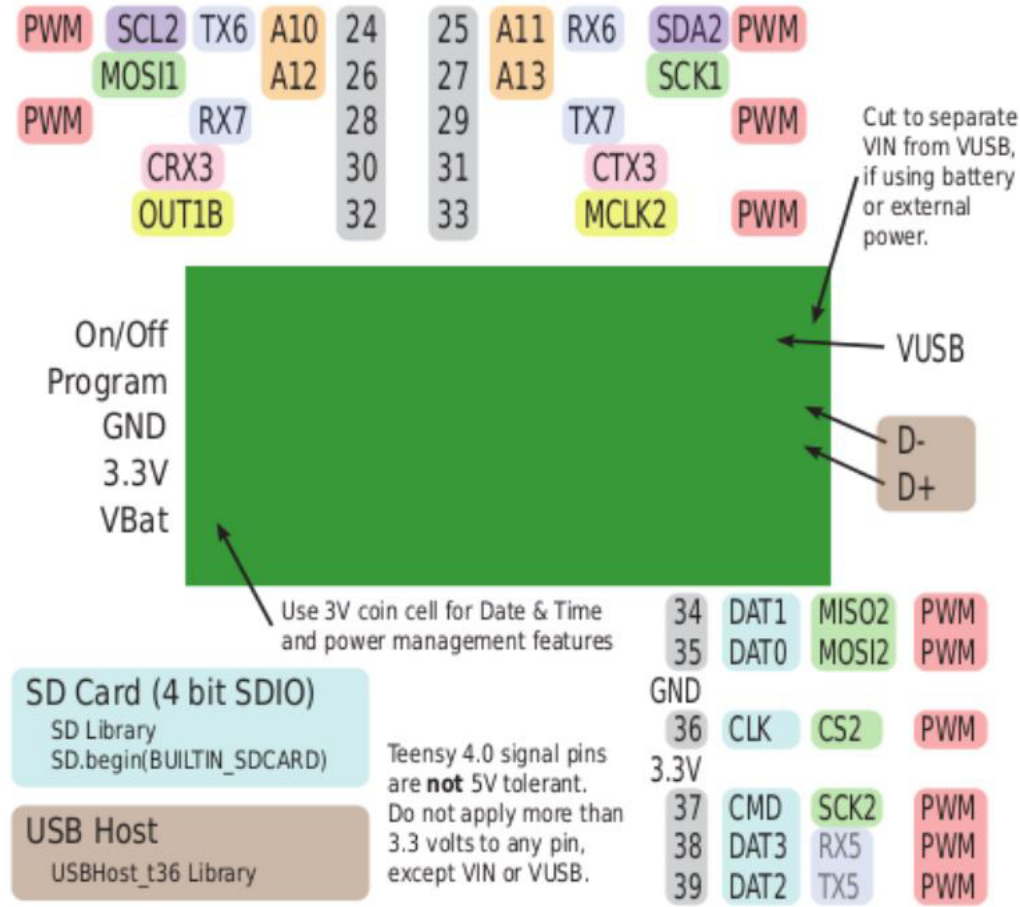

SD Card (4 bit SDIO)
SD Library
SD.begin(BUILTIN_SDCARD)

USB Host
USBHost_t36 Library

Teensy 4.0 signal pins are **not** 5V tolerant. Do not apply more than 3.3 volts to any pin, except VIN or VUSB.

For solutions to the most common issues and technical support, please visit:

www.pjrc.com/help

Teensy 4.0 System Requirements:
PC computer with Windows 7, 8, 10 or later
or Ubuntu Linux 14.04 or later
or Macintosh OS-X 10.8 or later
USB Micro-B Cable

7 14833 87948 0
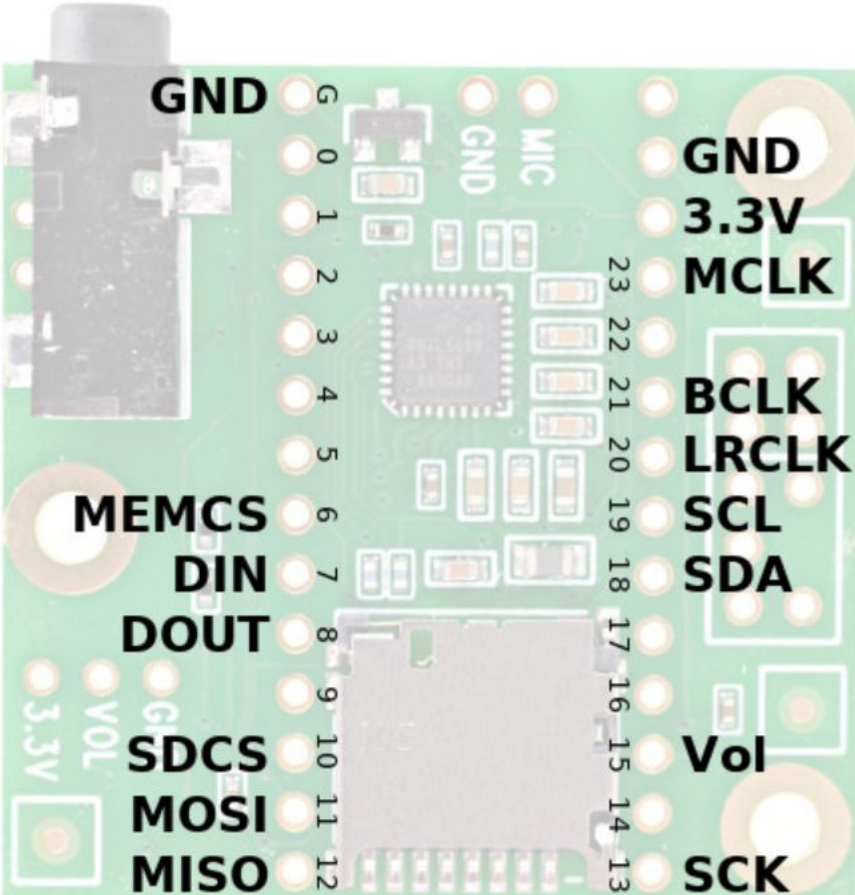
Rev D (Teensy 4.0)