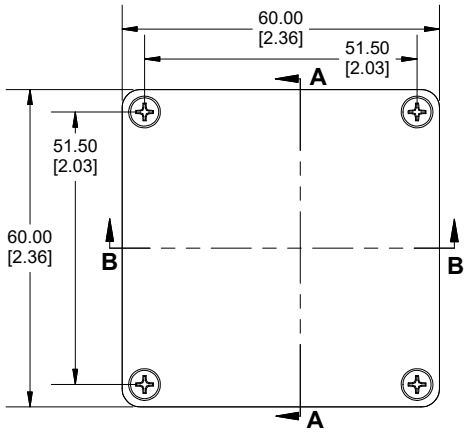

TOP VIEW

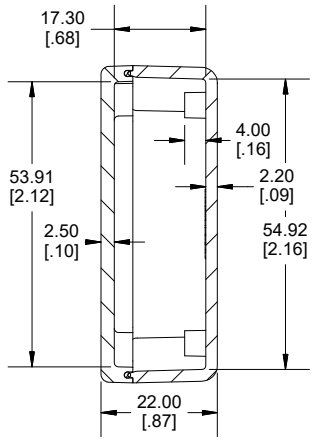

SECTION A-A
END VIEW

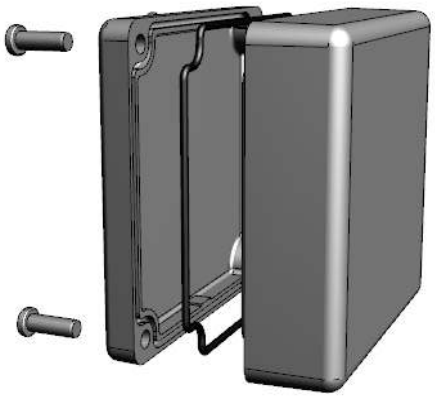

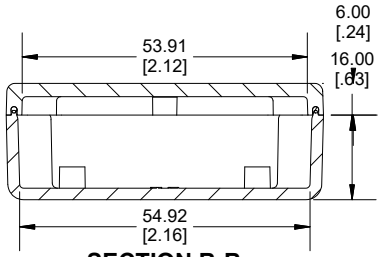

SECTION B-B
SIDE VIEW

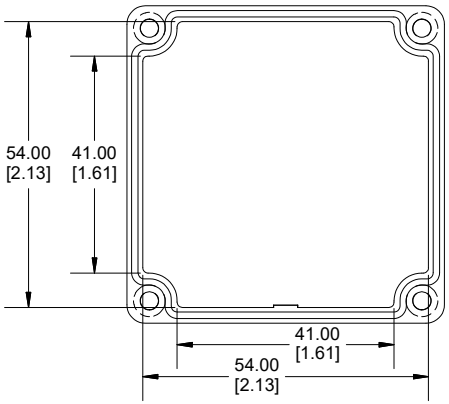

INSIDE LID

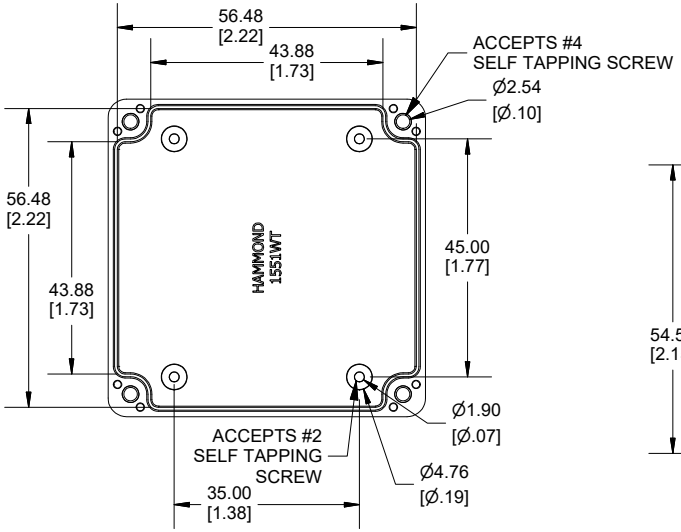

BOTTOM VIEW

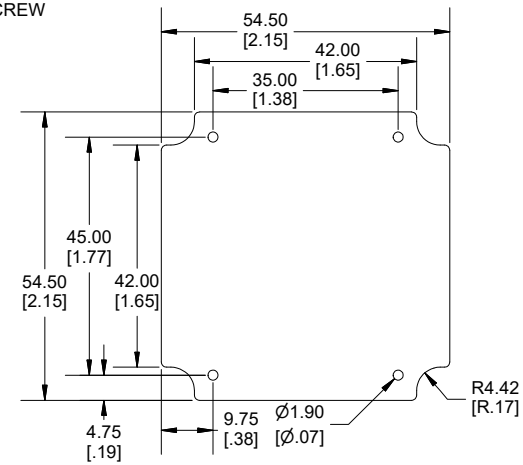

MAXIMUM
P. C. BOARD

Enclosures can be Factory Modified (Milling, Drilling, Printing etc.)
Contact Factory (modshop@hammfg.com) for quotes
Solid models of this enclosure available in .stp or .x_t
(Part number and text placement/orientation on our products are subject to change, we do not recommend using them as a locating reference for modification purposes)

NOTE
Purchased assembly includes box, lid, gasket, 4 cover screws. Polycarbonate material is rated UL94 - V0
Recommended Torque : #4 Cover screw (71-100) Ozf.in / (50-70) cN.m
Recommended Torque : #2 Internal screws (21-28) Ozf.in / (15-20) cN.m

PART NUMBERS	
1551WT Enclosure	
Polycarbonate Black Enclosure	1551WTBK
Polycarbonate Gray Enclosure	1551WTGY
ACCESSORIES	
Internal Mounting Post Screw [#2 x 3/16" Plastite Self-tapping (4.8mm)]	1553WTS100 (Pkg 100)
Stainless Steel Cover Screws [#4 X 3/8" Plastite Self-tapping (9.5mm)]	SC509-50 (Pkg 50)

Dimensions:
mm
[inches]

HAMMOND MANUFACTURING®

1551WT

www.hammondmfg.com

REV: 24.03.2021