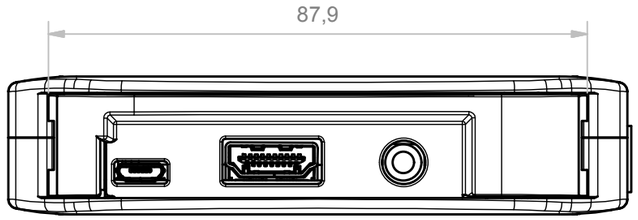

B-B (1 : 1)

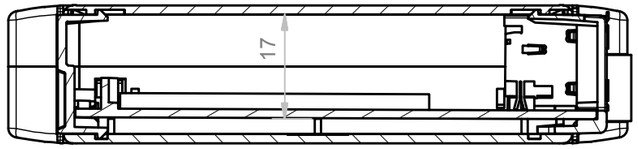

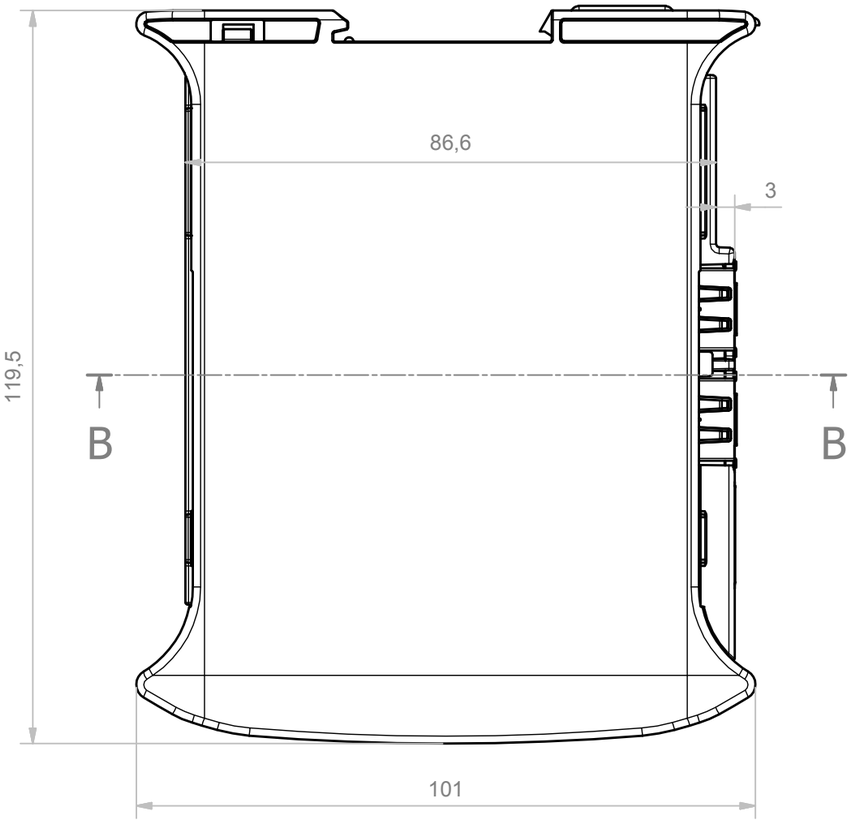

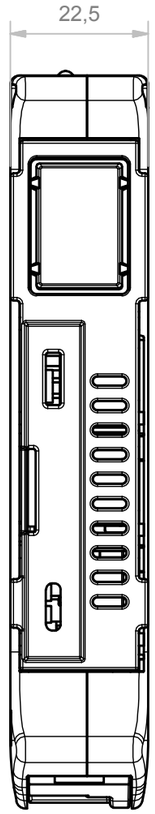

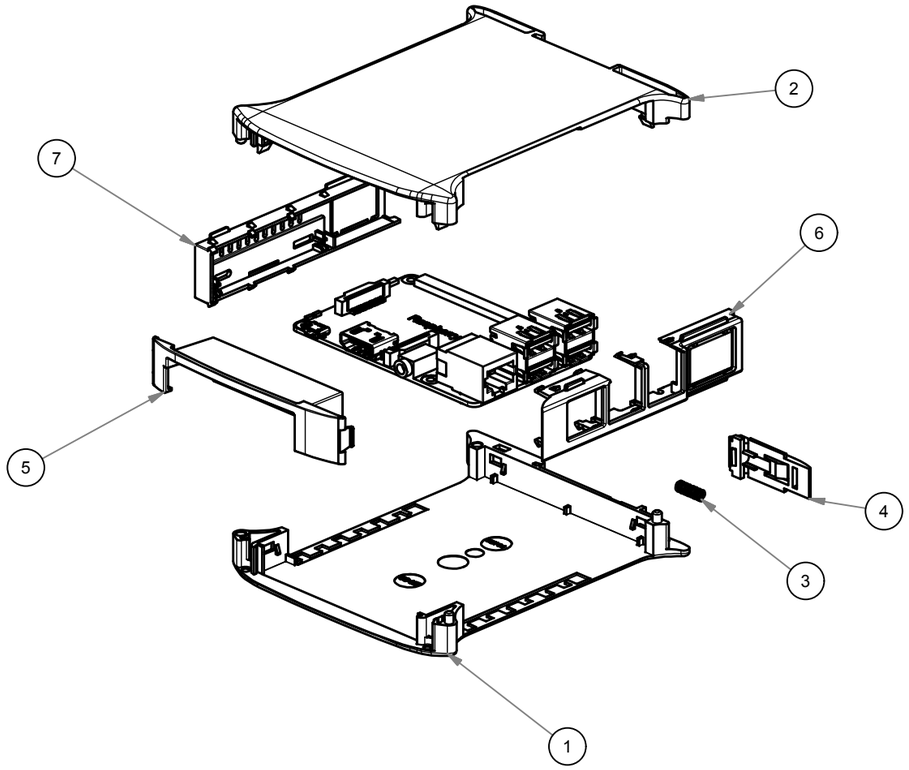

RIF.	Q.TY	DESCRIPTION	DRAWING
1	1	BASE RAILBOX 12.5 MM 3L	1.001.03429
2	1	COVER RAILBOX 10 MM 3L	1.001.03497
3	1	SPRING FOR HOOK RAILBOX	1.001.07874
4	1	HOOK RAILBOX	1.001.00249
5	1	FRONT HINGED RAILBOX RASPBERRY PI B+/PI 3	1.001.07339
6	1	HOLE COVER BREAKABLE 22.5 RASPBERRY PI B+/PI 3 LEFT	1.001.07338
7	1	HOLE COVER BREAKABLE 22.5 RASPBERRY PI B+/PI 3 RIGHT	1.001.07831

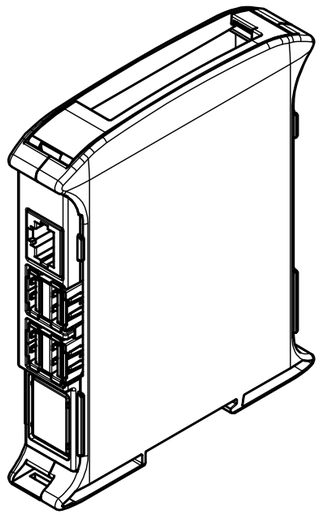

General Tolerance UNI EN 22768/1 Media (m)				
from 0.5 to 3	from 3 to 6	from 6 to 30	from 30 to 120	from 120 to 400
± 0.1	± 0.1	± 0.2	± 0.3	± 0.5

Scale:	Sheet nr.:	Drawed:	Checked:	Date:
1 : 1	1 / 1	N.R.	F.F.	21/03/2018

5	4	3	2	1
Revision description				

Dimension in mm

Material:

Weight: -

Volume: -

italtronic

www.italtronic.com

techcare@italtronic.com

Description:
KIT 22,5 RAILBOX RASPBERRY PI 3
KIT 22,5 RAILBOX RASPBERRY PI 3

Drawing nr. 3.050.00013

Rev. 00

RESERVED PROPERTY: The present drawing cannot be reproduced or comunicated to 3d parties, even partially, without the authorization of ITALTRONIC Srl. Italtronic reserves to protect its own rights according to the law.